AC50651
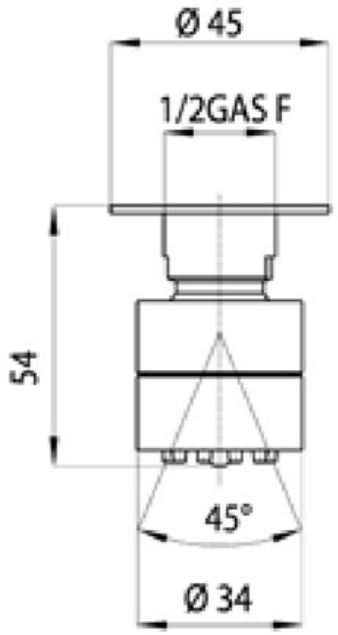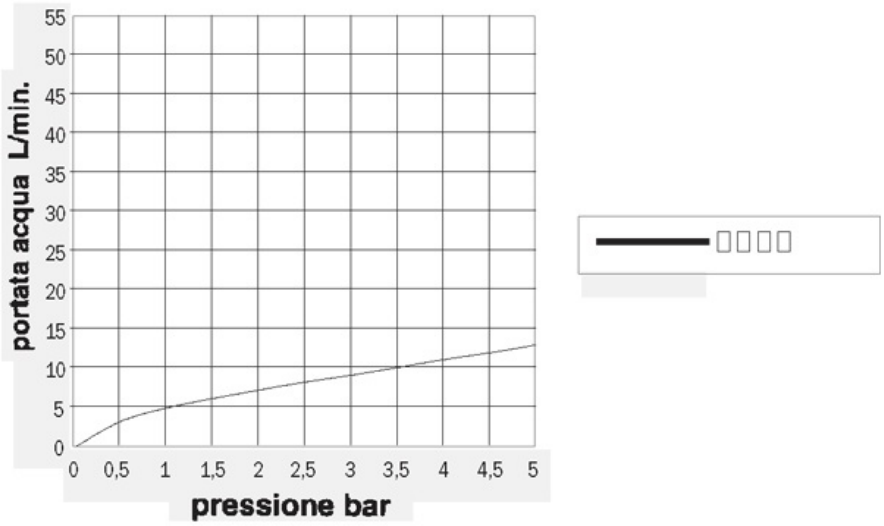
Buse hydromassage