BD32113

BEC MURAL CASCADE 20 CM SAILLIE 14 CM NOIR

CRISTINA ondyna

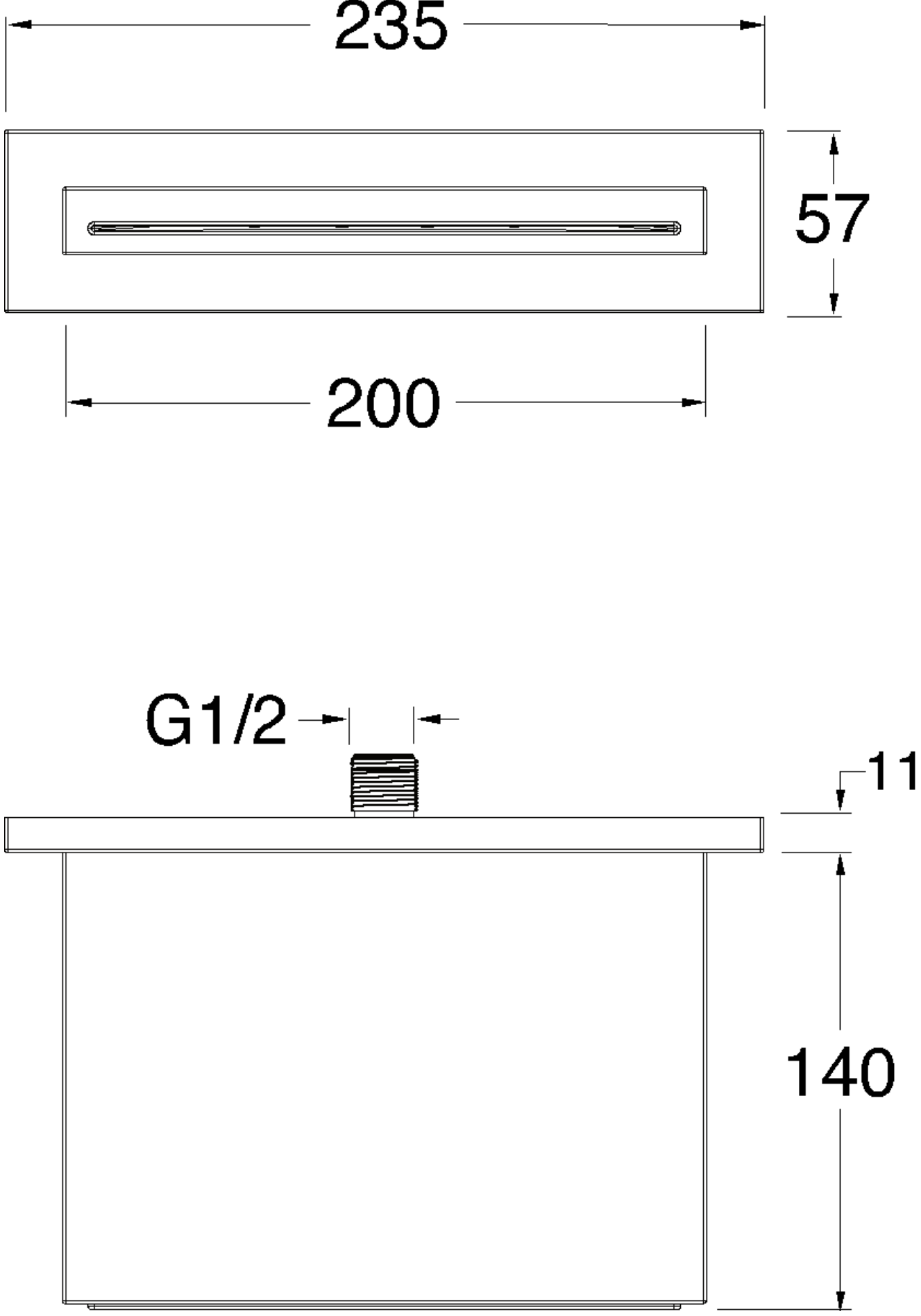
235
57
200
G1/2
11
140