BD32128

QUADRI bec mural cascade 20 cm

CRISTINA ondyna

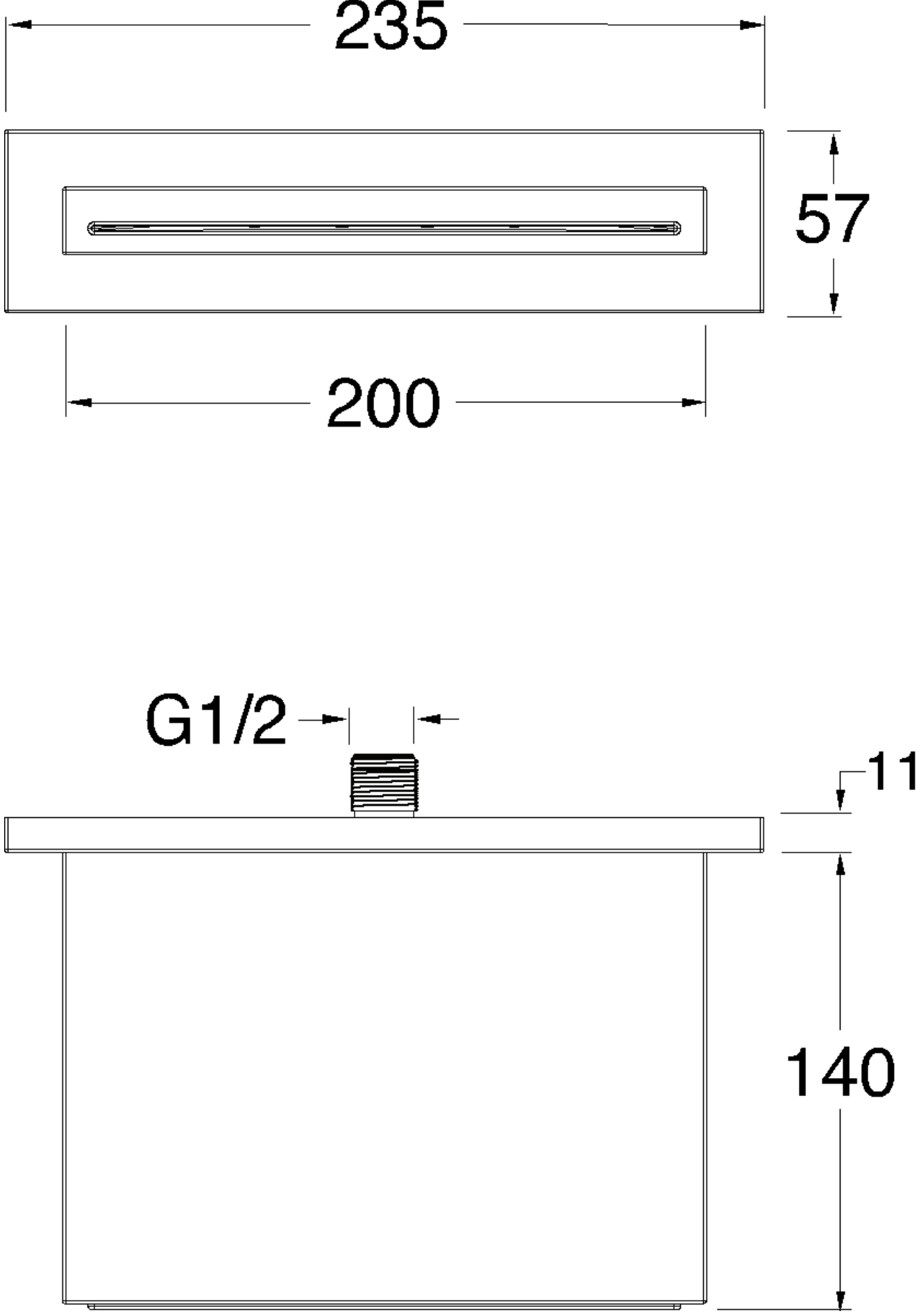
235
57
200
G1/2
11
140