PD66451
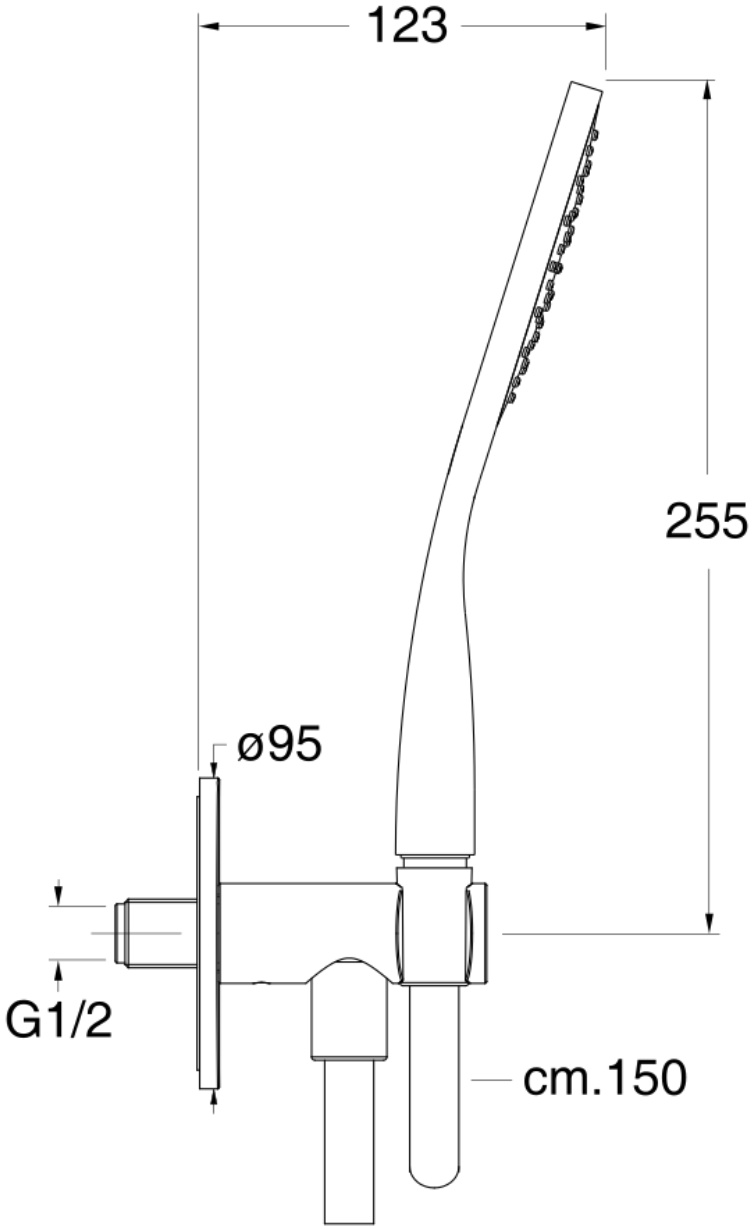
Kit Bollicine