# TE40751
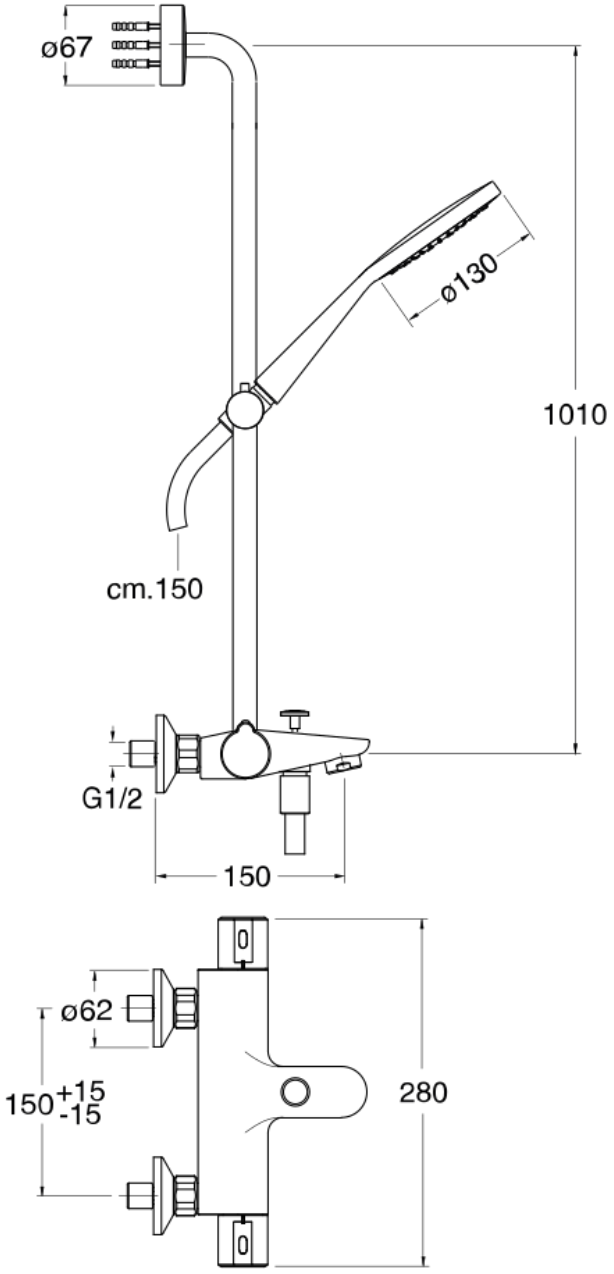
theta combiné